Lamp 35–150 Watt
material Al. 51 st.
blue anodised
general tol. 0.2 mm

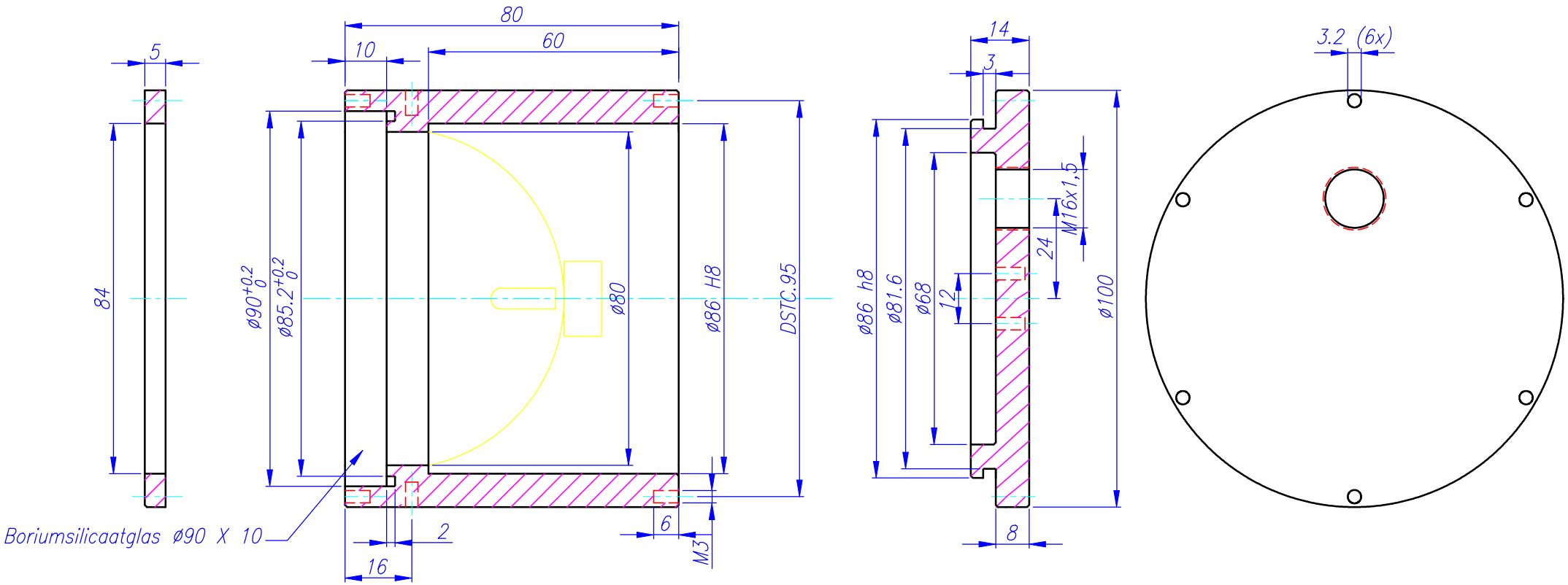


O-ring: front ø85 x 2,4
back ø80 x 2.5