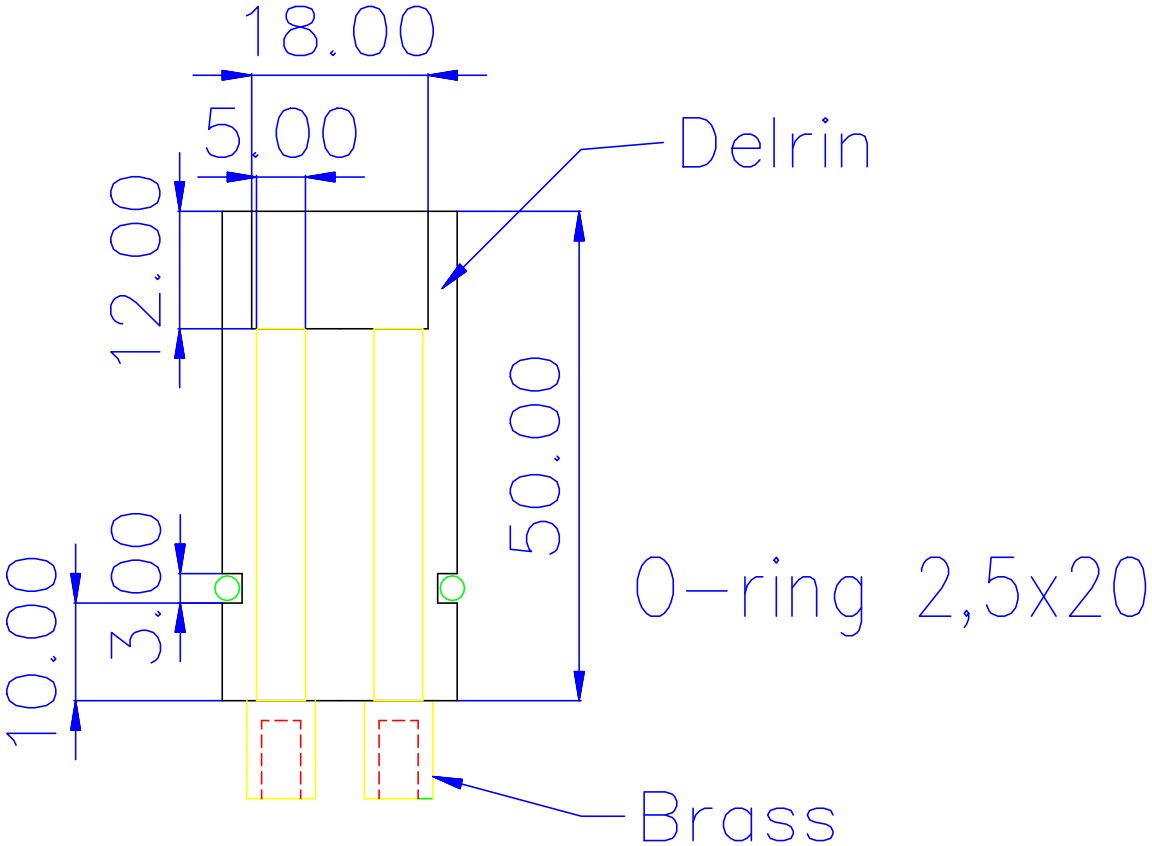
18.00
5.00
Delrin
12.00
50.00
3.00
10.00
0-ring 2,5x20
Brass

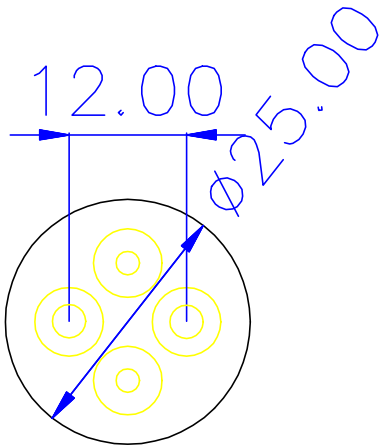
12.00
Ø25.00